MARK	DATE	REMARKS
1		
2		

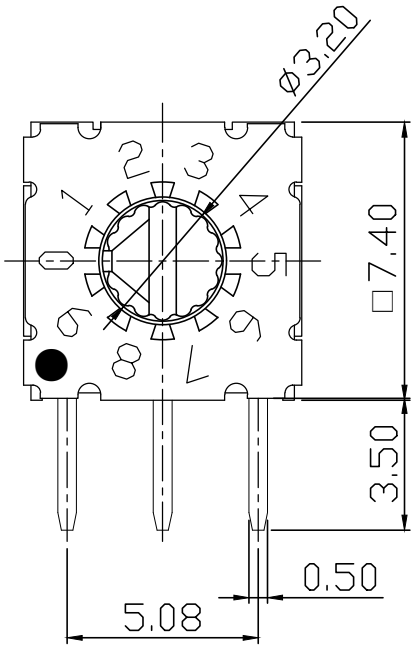

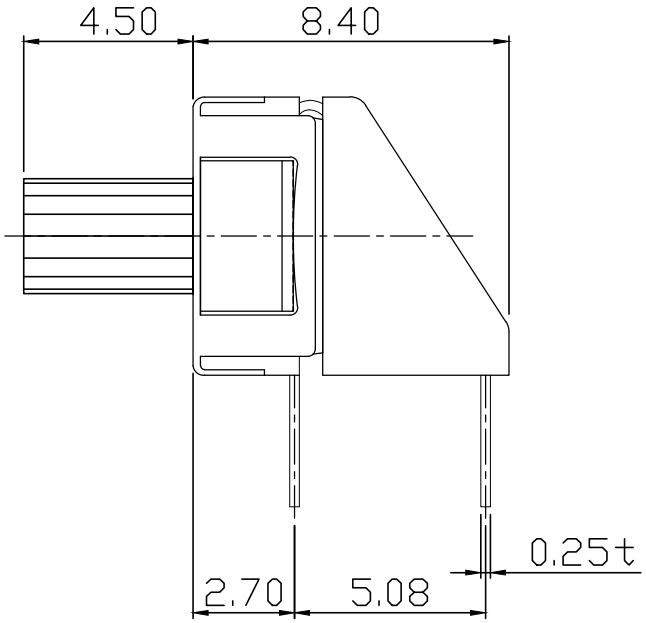

SPECIFICATION

1. Operating Voltage : 42V
   (None-Switching : 400mA)
   (Switching : 100mA)
2. Contact Resistance : 80mΩ Max
3. Insulation Resistance : 100MΩ Min
4. Operating Force : 120gf.cm ±30 Max
5. Life Cycle : 25,000 steps
6. Sealing : Comparable IP67

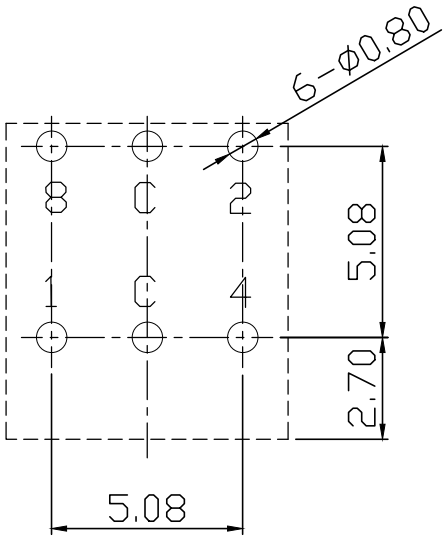

P.C.B DIMENSION (TOP VIEW)

		Real Coded				
		C	1	2	4	8
10 Position	0	●				
	1	●	●			
	2	●		●		
	3	●	●	●		
	4	●			●	
	5	●	●		●	
	6	●		●	●	
	7	●	●	●	●	
	8	●				●
	9	●	●			●
16 Position	A	●		●		●
	B	●	●	●		●
	C	●			●	●
	D	●	●		●	●
	E	●		●	●	●
	F	●	●	●	●	●

GENERAL TOLERANCE ±0.3 mm

APPD	CHKD	D'SGD	TITLE.	MINI ROTARY DIP SWITCH
J.P ROH	S.M PARK	Y.N JEON 2019.03.14	MODEL NO.	MSSR-10F
			BONSDA	深圳市子庚科技有限公司

REV 02

深圳市子庚科技有限公司 业务专用章